50 Years of Unmatched Chemical Resista
KYNAR® (PVDF) + OPW = 15 Years of Exc

UNDERGROUND PIPE EXCELLENCE FOR 15 YEARS

OPW's philosophy in 1997 was simple:

Develop the best fuel pipe in the world…by using the best materials in the world. That's why KYNAR® (PVDF) has always been at the heart of our pipe. KYNAR® (PVDF) has a 50-year track record in the world's most demanding chemical handling applications. This has formed the foundation for our pipe's stellar reputation and time-proven performance.

Unlike less sophisticated polymers, KYNAR® (PVDF) handles all comers with ease. It maintains its peerless performance, even in the face of the most aggressive alcohol fuels and additives. That explains the automaker's transition to multi-layer construction fuel lines with KYNAR® FLEX as the barrier layer. OPW ensured that its customers were ahead of this curve from day one.

Impenetrable, Impervious, Invulnerable, Indestructible…the words most commonly used in the chemical world to describe the performance of KYNAR® (PVDF), the unrivaled Gold Standard in Thermoplastics - **at the heart of the Gold Standard in Fuel Pipe for 15 years.**

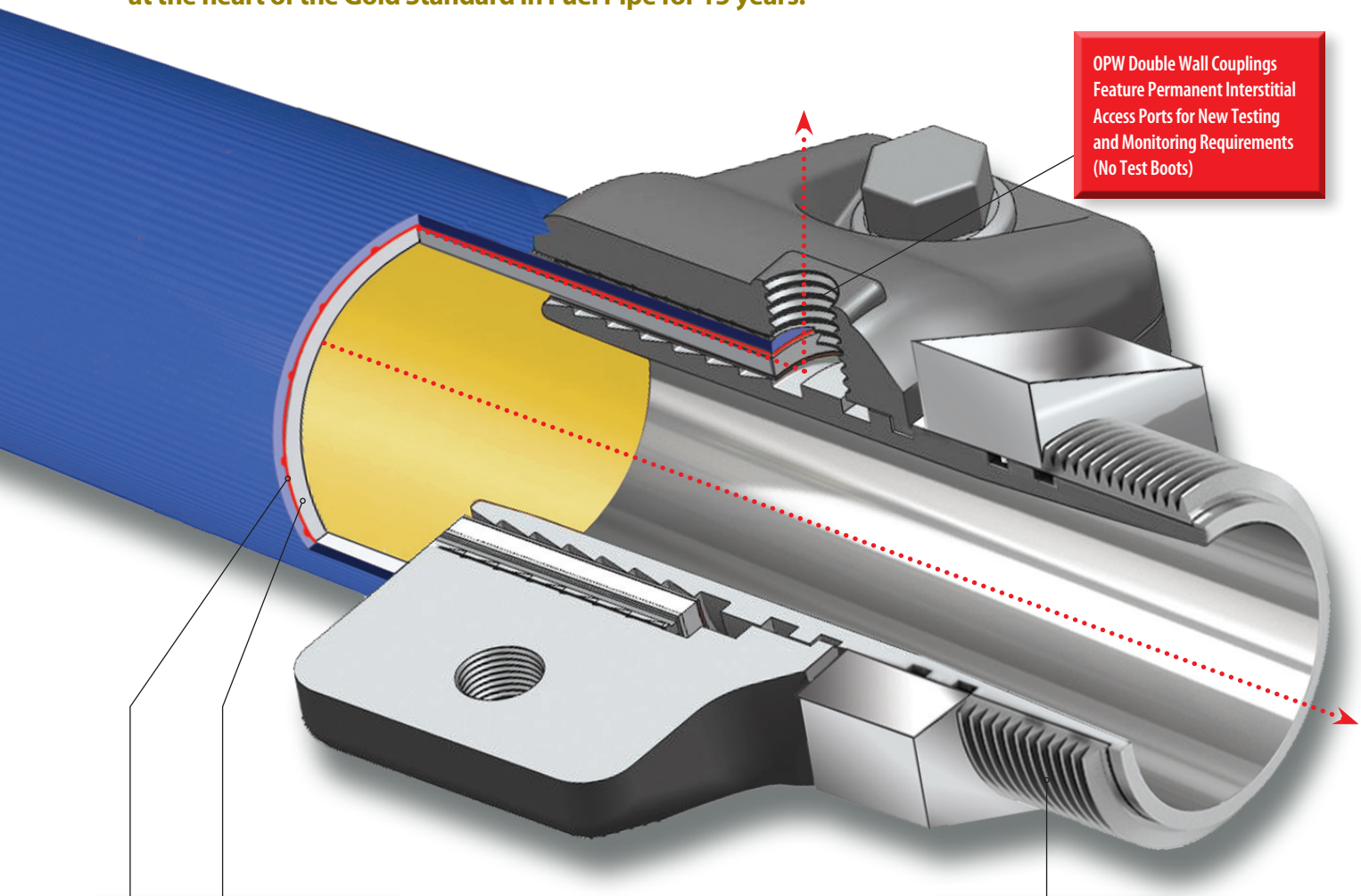

ance Performance Packed into One Unique Pipe - ellence in Underground Pipe Performance.

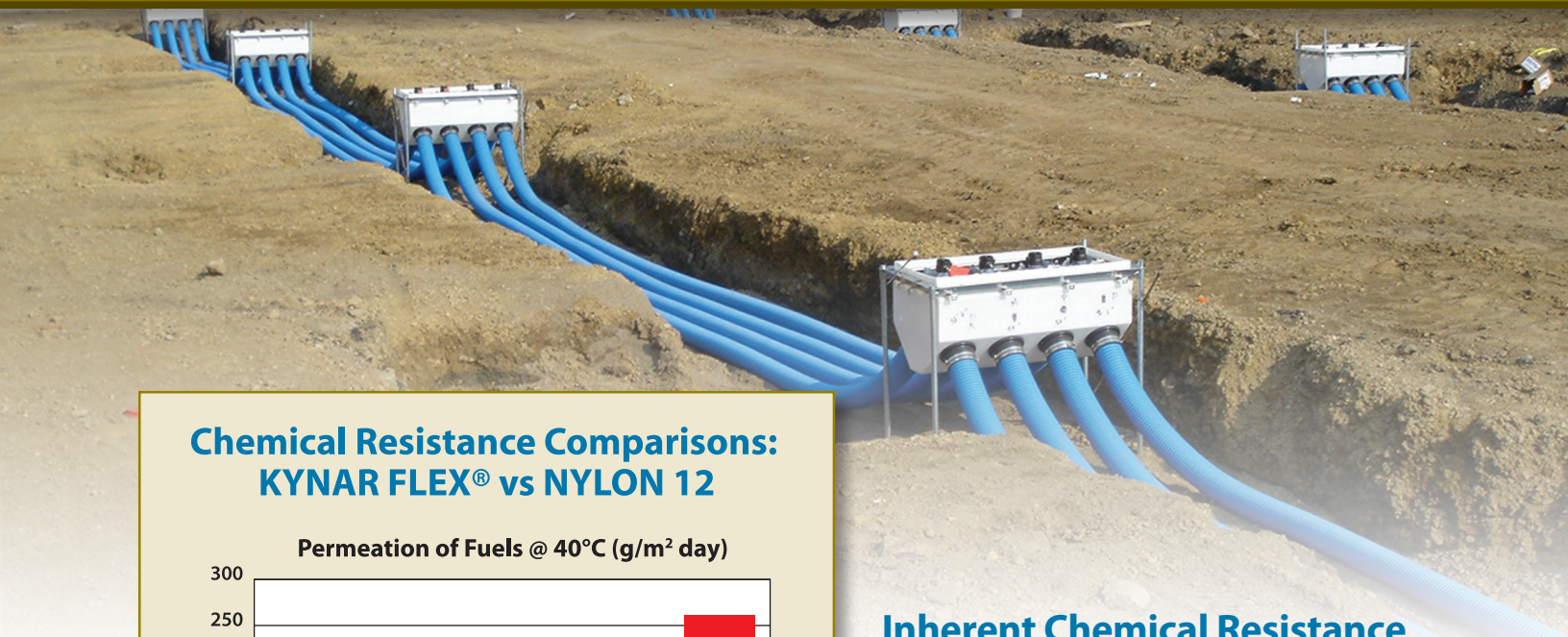

Chemical Resistance Comparisons: KYNAR FLEX® vs NYLON 12

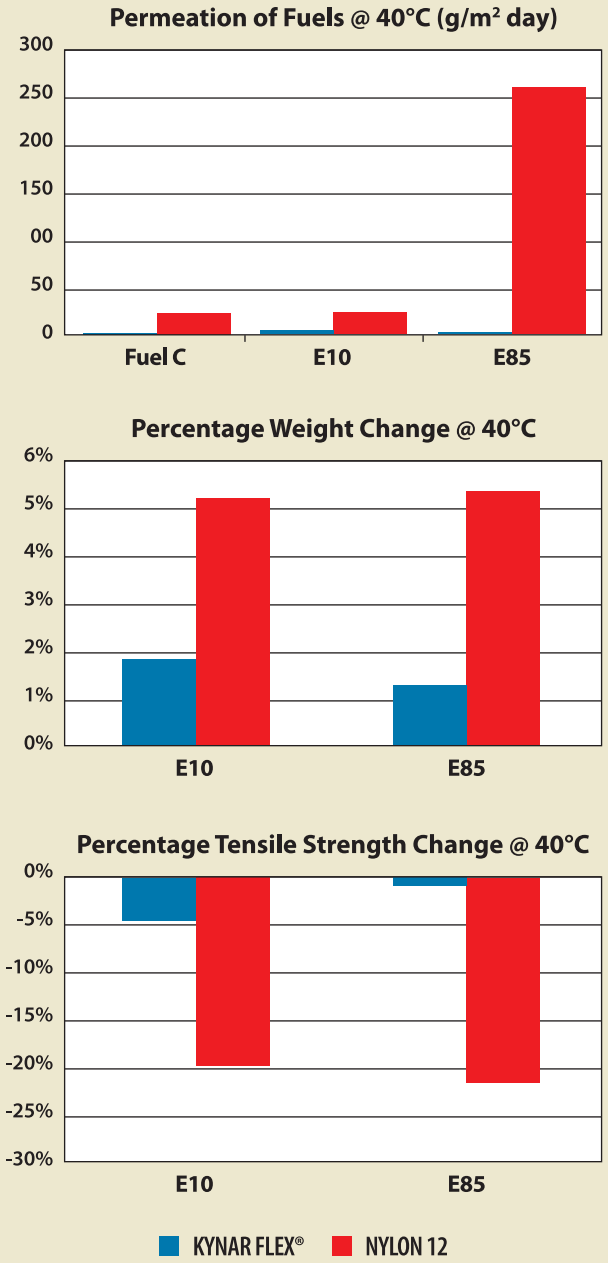

Inherent Chemical Resistance is the Difference

KYNAR (PVDF) is an engineering thermoplastic widely used in the most aggressive of fluid handling applications. Its fluoropolymer chemical structure makes it incredibly inert, dense, and permeation resistant. Other less sophisticated resins simply do not enjoy the broad chemical resistance properties of KYNAR (PVDF). For instance, Nylons, while traditionally used for certain petroleum applications, struggle significantly in motor fuels when alcohol is added. Nylon's physical properties deteriorate and permeation levels increase dramatically in ethanol fuels. Automakers realized this years ago when ethanol fuel came onto the scene. That explains their shift to multi-layer construction fuel line tubing with a KYNAR (PVDF) barrier layer. The density of KYNAR (PVDF) is 62% higher than that of Nylon 12. It outperforms Nylon 12 in every important category regarding chemical resistance, especially for use with alcohol fuel. Permeation resistance of KYNAR (PVDF) is on the order of 10 times that of Nylon 12 in E10, and the difference grows exponentially higher from there as the alcohol content in the fuel increases. Minimal weight change and maximum tensile strength retention are also key indicators of chemical resistance. Again, KYNAR (PVDF) outperforms all comers by a wide margin, especially when up against the most aggressive alcohol fuels, additives, and bio-diesel. Materials matter, and OPW uses the best. That's been our simple philosophy since 1997, and it has served our customers well.

OPW®
FUELING CONTAINMENT SYSTEMS
A DOVER™ COMPANY

Next-Generation Solutions for Next-Generation Requirements

In the ever-evolving world of environmental protection, you need an underground fuel transfer and containment system that provides advanced capabilities that enable you to provide a higher level of protection, meet Next-Generation compliance needs and help you control costs. You need a Next-Generation solution from OPW! Proven. Reliable. Innovative. The only fully integrated underground system that provides for end-to-end double containment, complete testing, monitoring and is totally accessible all the time.

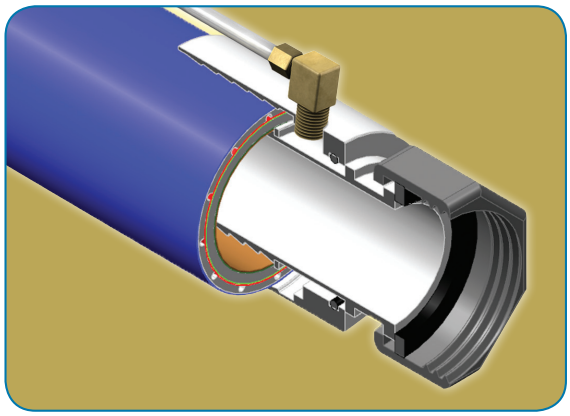

Next-Generation OPW FlexWorks Pipe

- Increased Pipe Flexibility – the force required to bend the pipe has been reduced to facilitate piping layout
- Pipe Memory - inherent pipe memory has been reduced significantly to facilitate connection of pipes inside sumps
- Next-Generation Enhanced KYNAR® FLEX Liner

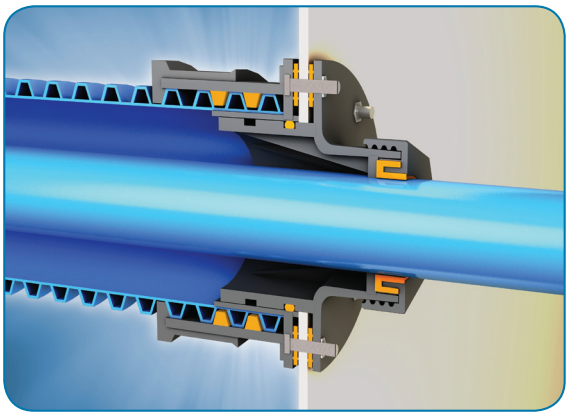

Next-Generation Entry Fitting

- Sealing redundancy throughout – maximum containment and unmatched protection from water intrusion
- Preserves total accessibility – for monitoring, maintenance, testing and repair
- Maintains flexibility to accommodate pipe and ground movement
- Hard shell exterior – to weather the elements and abuse of the underground environment

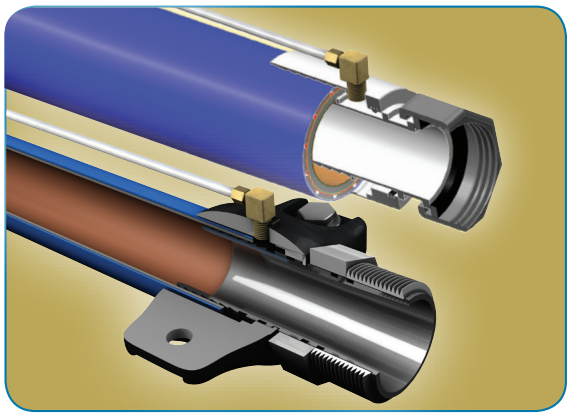

True Double-Wall Pipe Couplings

- Permanent testing access to the pipe's interstitial space
- Eliminates rubber test boots completely
- Eliminates the need to trim back secondary pipe jacket
- Bolt-On or Swaged-On design for any application

Innovative Loop System

- Factory Assembled System – saves installation time and money; improves install reliability
- Every component easily accessible for maintenance and new testing requirements without removing dispensers

OPW®
FUELING CONTAINMENT SYSTEMS
A DOVER COMPANY

3250 US Hwy. 70 Business West ◆ Smithfield, NC 27577
Customer Service: (800) 422-2525 ◆ Fax: (800) 421-3297
Technical Service: **877-OPW-TECH** (877) 679-8324
www.opwglobal.com

GLDSTD 5/12 • 0M